Audio Regenesis

Power Supply Capacitor Replacement Board

For

Dynaco PAS 2, 3, 3X Preamplifiers

Installation Guide

Thank you for choosing our power supply capacitor replacement board for your Dynaco PAS preamplifier. Like all Audio Regenesis restoration products, it is designed to integrate easily into your amplifier without chassis modifications of any kind.

This board is designed to replace the original twist lock capacitor for the high voltage supply as well as the selenium rectifier and filter capacitor assembly for the 12AX7 tube filaments. Note: the 12X4 tube is retained for high voltage rectification. Please follow this guide carefully to ensure a successful and safe installation.

Note: while installation is quite easy and straight forward, it does require that you possess reasonable soldering skills and equipment.

During installation you may wish to refer to the original assembly manual. If you do not have one, a free copy is available at: **www.audioregenesis.com/manuals**

HIGH VOLTAGE WARNING

Vacuum tube amplifiers contain lethal voltages. Extreme care must be exercised at all times when working with the top or bottom covers removed. If you are not certain of your ability to safely perform the following installation procedure it is advised that you seek the services of a qualified technician.

Before beginning the installation process switch off the amplifier and disconnect the power cord from the AC source. Wait at least 30 minutes before removing the top and bottom covers. This will allow time for the voltage on the power supply capacitors to bleed off.

Installation Procedure

Disconnect and remove the selenium rectifier assembly:

Refer to Fig. 1 and Fig. 2 for the following steps:

☐ (1) Remove the top and bottom covers and locate SELENIUM RECTIFIER. Note that the selenium rectifier has four terminals to which various wires are connected. The assembly manual refers to these terminals as Red, Black, Yellow and Terminal Lug. The capacitor replacement board has corresponding eyelets labeled Red, Black Yellow and TL. As well, the same eyelets are also labeled 1, 2, 3, and 4 respectively.

☐ (2) Carefully unsolder the wires from each of the selenium rectifier terminals. Label each wire with the terminal number (or color) from which it was removed as you proceed.

☐ (3) After all the wires have been unsoldered and labeled, remove the selenium rectifier and capacitor assembly.

Install the capacitor board:

Refer to Fig. 3 for the following step:

☐ (4) Install the capacitor board in the orientation shown in Fig. 3. Use the supplied mounting screw and lock washer to secure the board using the same chassis hole that was used to mount the selenium rectifier. Be sure to tighten securely for a good ground connection to the chassis.

Note: The four corner mounting holes are not used in PAS installations. These may be useful in other DIY projects.

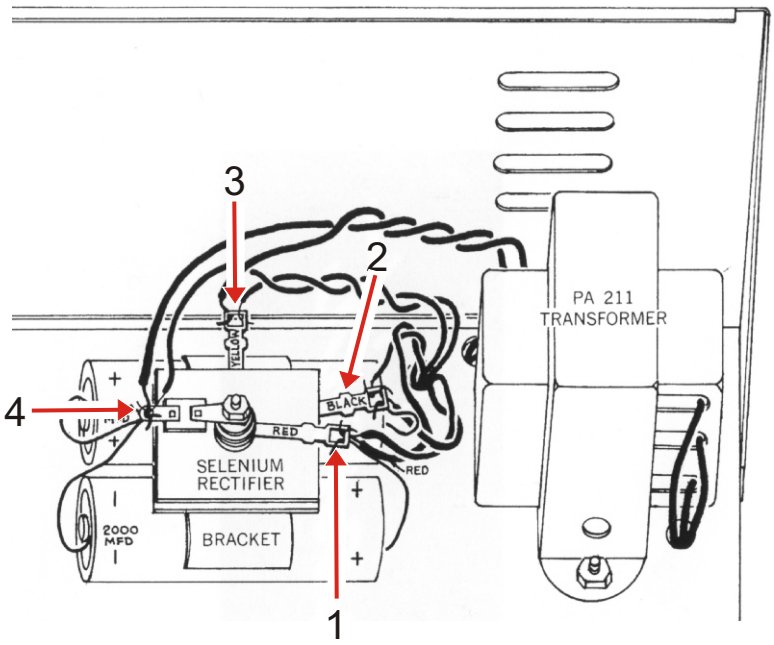

Unsolder and label wires connected to selenium rectifier

Unsolder the wires connected to terminals 1-4 on the SELENIUM RECTIFIER. Label each wire with the respective terminal number as it is removed.

Fig. 1

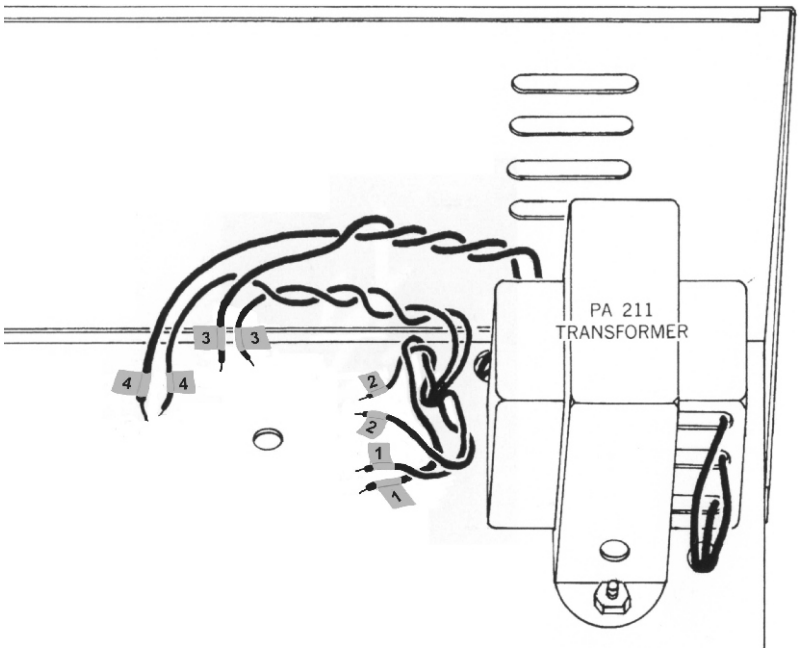

Selenium rectifier assembly removed from chassis

After all the wires have been unsoldered and labeled, remove the selenium rectifier and capacitor assembly.

Fig. 2

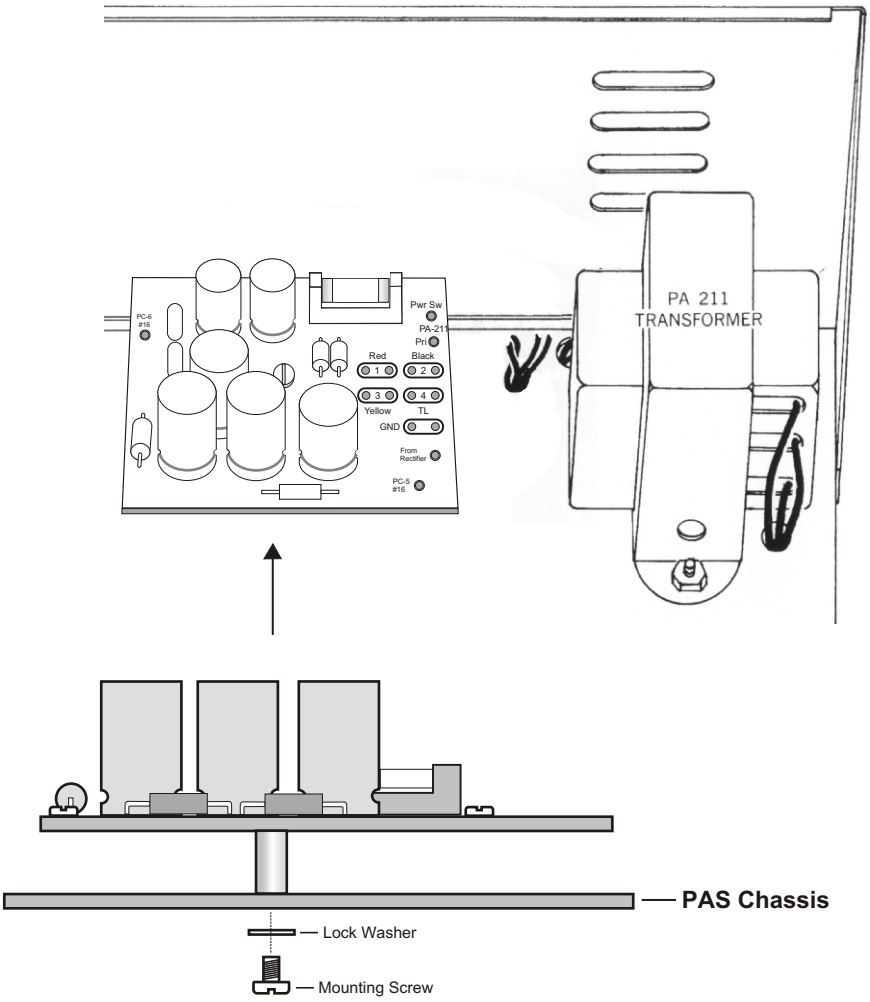

Installing the capacitor board

Install the capacitor board in the orientation shown above. Use the supplied mounting screw and lock washer to secure the board using the same chassis hole that was used to mount the selenium rectifier.

Fig. 3

Prepare the PAS 211 transformer primary fuse wiring:

Refer to Fig. 4 for the following step:

In this step we will prepare the power supply transformer primary side wiring for connection to the fuse on the capacitor board. Basically, all we're doing is breaking the switched connection to the transformer primary winding and routing it through the fuse.

Note: the fuse only protects the PA-211 transformer and the circuitry following it. The AC outlets on the back panel ARE NOT routed through this fuse.

☐ (5) The two black wires (primary winding) from the PA 211 transformer pass through a hole to the bottom side of the chassis. These wires are connected to terminals A and B of AC outlet 4. Disconnect the transformer wire connected to terminal A and bring it back up through the hole to the top side of the chassis. Label this wire **Pwr Sw**.

Connect a new black wire to terminal A of AC outlet 4 and pass it through the hole to the top side of the chassis. Label this wire **Pri**.

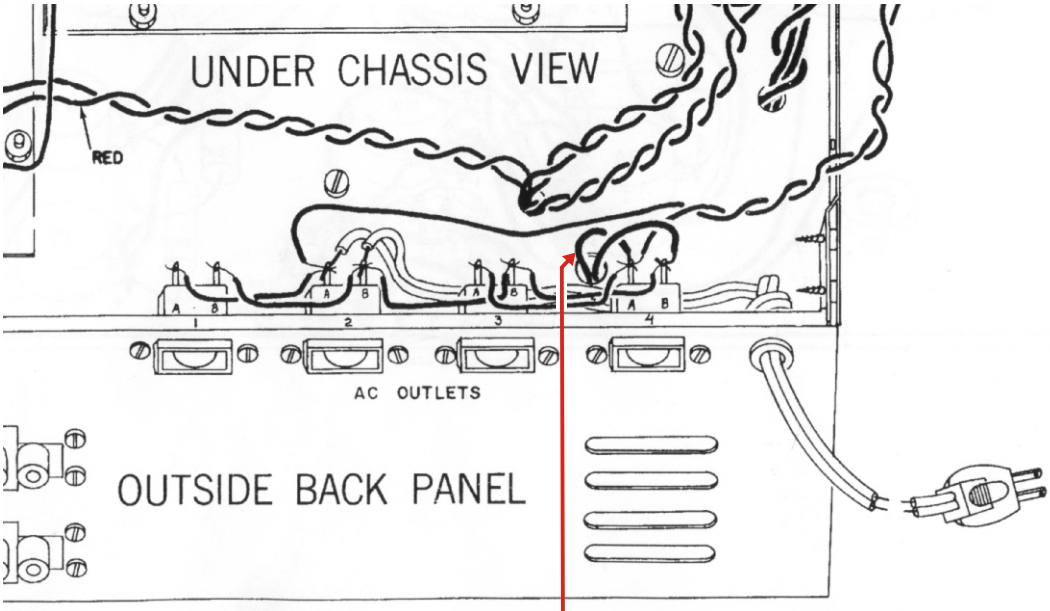

Prepare transformer fuse wiring

Disconnect the transformer wire connected to AC Outlet 4, terminal A. Pull it back through the hole to the top side. Label it **Pwr Sw**. Connect a new wire to AC outlet 4, terminal A and pass it through the hole to the top side. Label the new wire **Pri**.

Fig. 4

Prepare the 12X4 rectifier and GND wiring:

Refer to Fig. 5 for the following steps:

In this step we will disconnect the 12X4 rectifier tube from the twist lock capacitor and prepare a wire for connection to the capacitor board.

☐ (6) Remove the wire that connects pin 7 of tube socket V1 to Lug 1 of the twist lock capacitor. Connect a new wire to pin 7 of V1 and route it through the hole to the top side of the chassis. Label this wire **Rectifier**.

☐ (7) Connect a new wire to the point on the chassis where the transformer secondary Red/Yellow wire is connected and route it through the hole to the top side of the chassis. Label this wire **GND**.

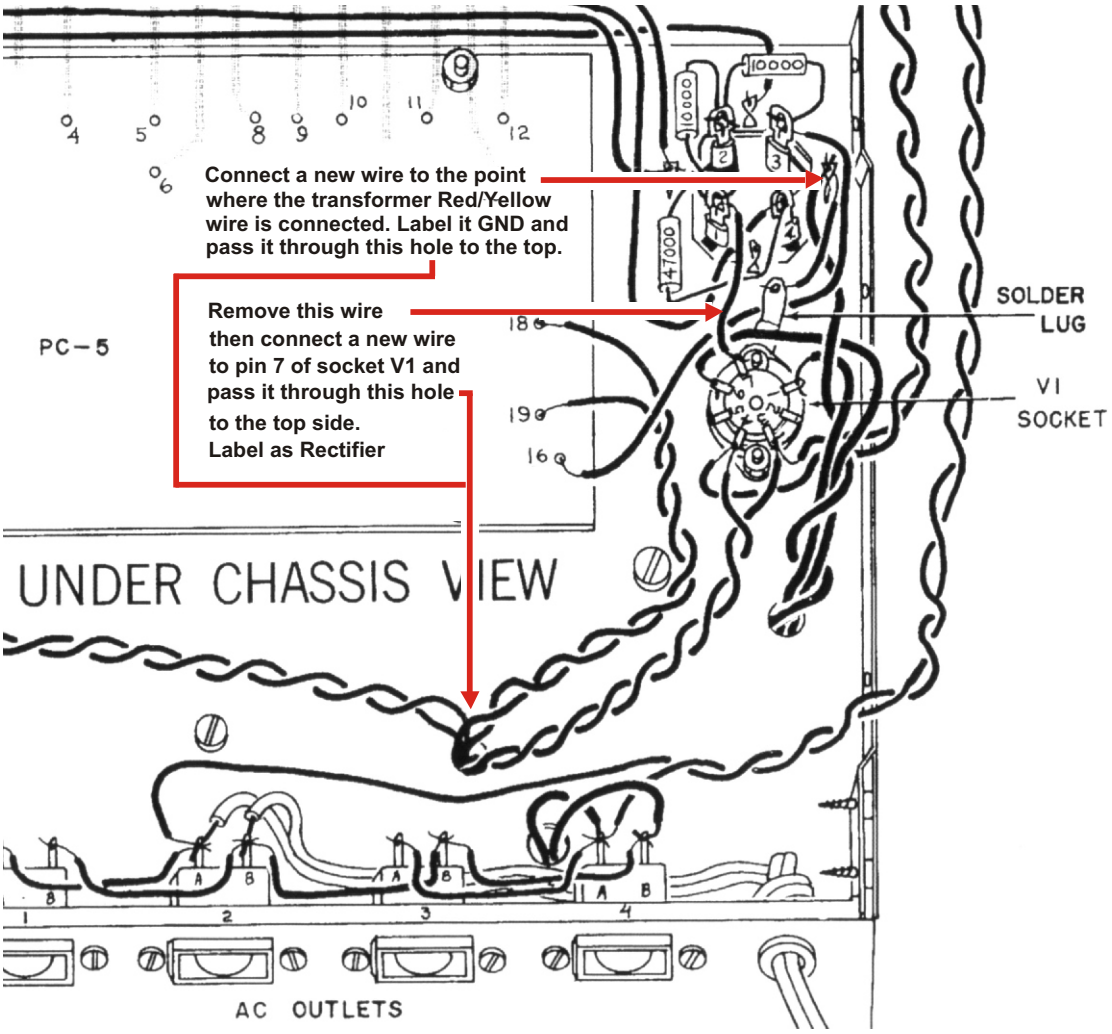

Prepare 12X4 rectifier and GND wiring

Fig. 5

Wiring the capacitor board:

Wires are inserted and soldered to the eyelets on the top side of the capacitor board. Wires should be prepared by pre-tinning the ends, then cut back to 1/4 inch, or less, to avoid shorting to other wires in nearby eyelets on the bottom side.

☐ (8) Solder the wires, previously labeled **Pwr Sw** and **Pri** to the corresponding **Pwr Sw** and **Pri** eyelets on the capacitor board.

☐ (9) Solder the wires, previously labeled **1, 2, 3** and **4** (or Red, Black, Yellow, TL) to the corresponding eyelets on the capacitor board. For ease of assembly, solder the wires in the order: 2, 1, 4, 3.

☐ (10) Solder the wire, previously labeled **Rectifier** to the **From Rectifier** eyelet on the capacitor board.

☐ (11) Solder the wire, previously labeled **GND** to one of the **GND** eyelets on the capacitor board.

Refer to Fig. 6 for the following steps:

☐ (12) Remove the wires that connect eyelets #16 on both the PC-5 and PC-6 to their respective points on the old twist lock capacitor.

☐ (13) Solder a wire from eyelet PC-6 #16 on the capacitor board to eyelet 16 on the PC-6 board.

☐ (14) Solder a wire from eyelet PC-5 #16 on the capacitor board to eyelet 16 on the PC-5 board.

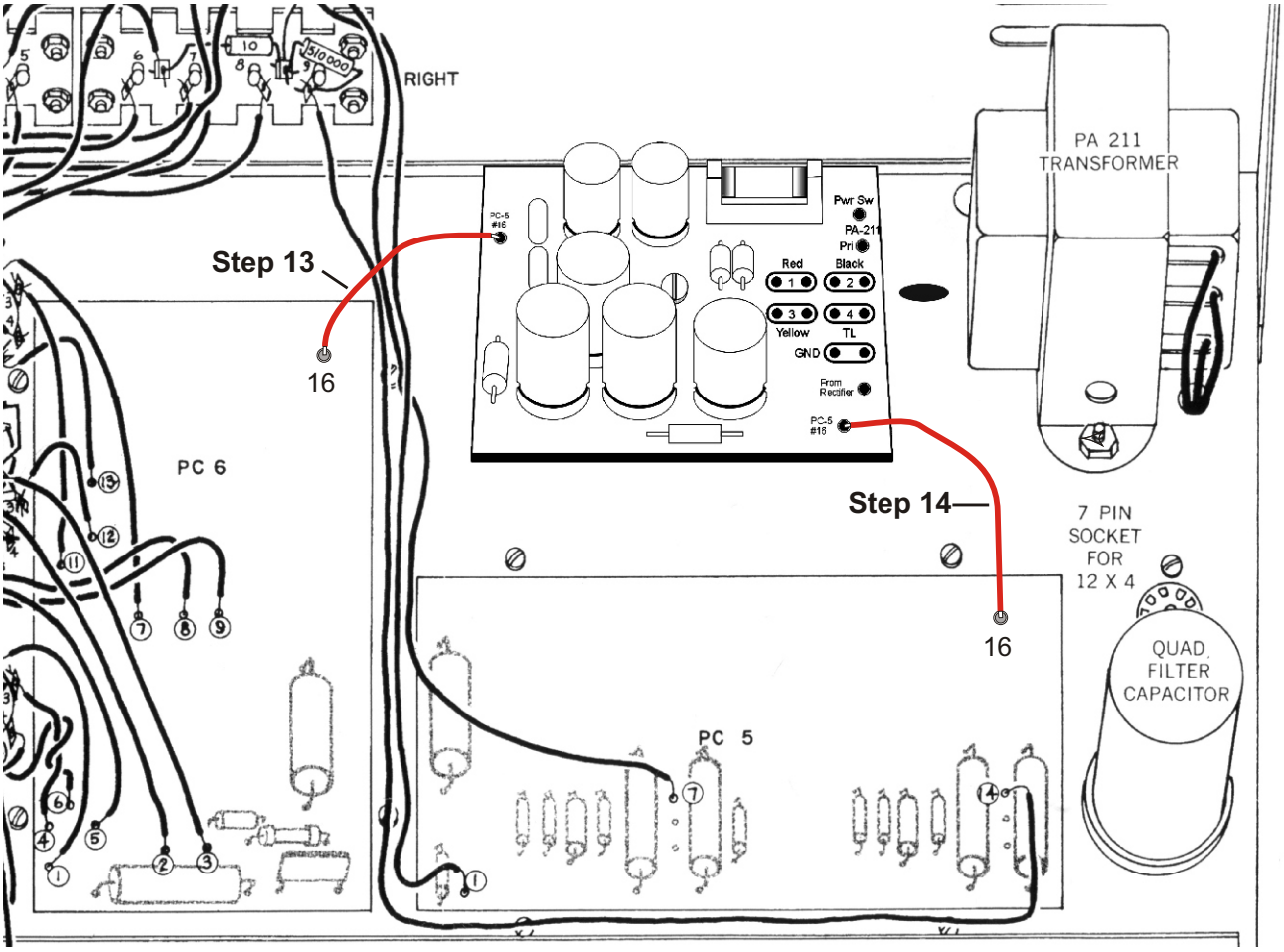

Fig. 6

This completes the installation of the capacitor board. Before installing the covers and applying power, double-check your wiring for errors. You may want to leave the wire labels in place until proper operation is confirmed.

If the fuse blows check your wiring again. Also remove the screw form the top side of the capacitor board and turn the board over to check for any wires shorting to adjacent eyelets. **BE SURE** to allow time for the power supply capacitors to discharge before removing the covers again to do these checks.

PC-6 Alternate Ground Wiring:

In some cases phono hum may be reduced by connecting the two ground wires from eyelets 4 and 11 on the PC-6 board as shown below in Fig 7.

Install the solder lug (supplied) under the screw retaining the capacitor board standoff on the bottom side of the chassis.

Disconnect the ground wires where they are terminated at the lug on the old twist lock capacitor, route them as shown below, and solder to the ground lug on the bottom of the cap. board.

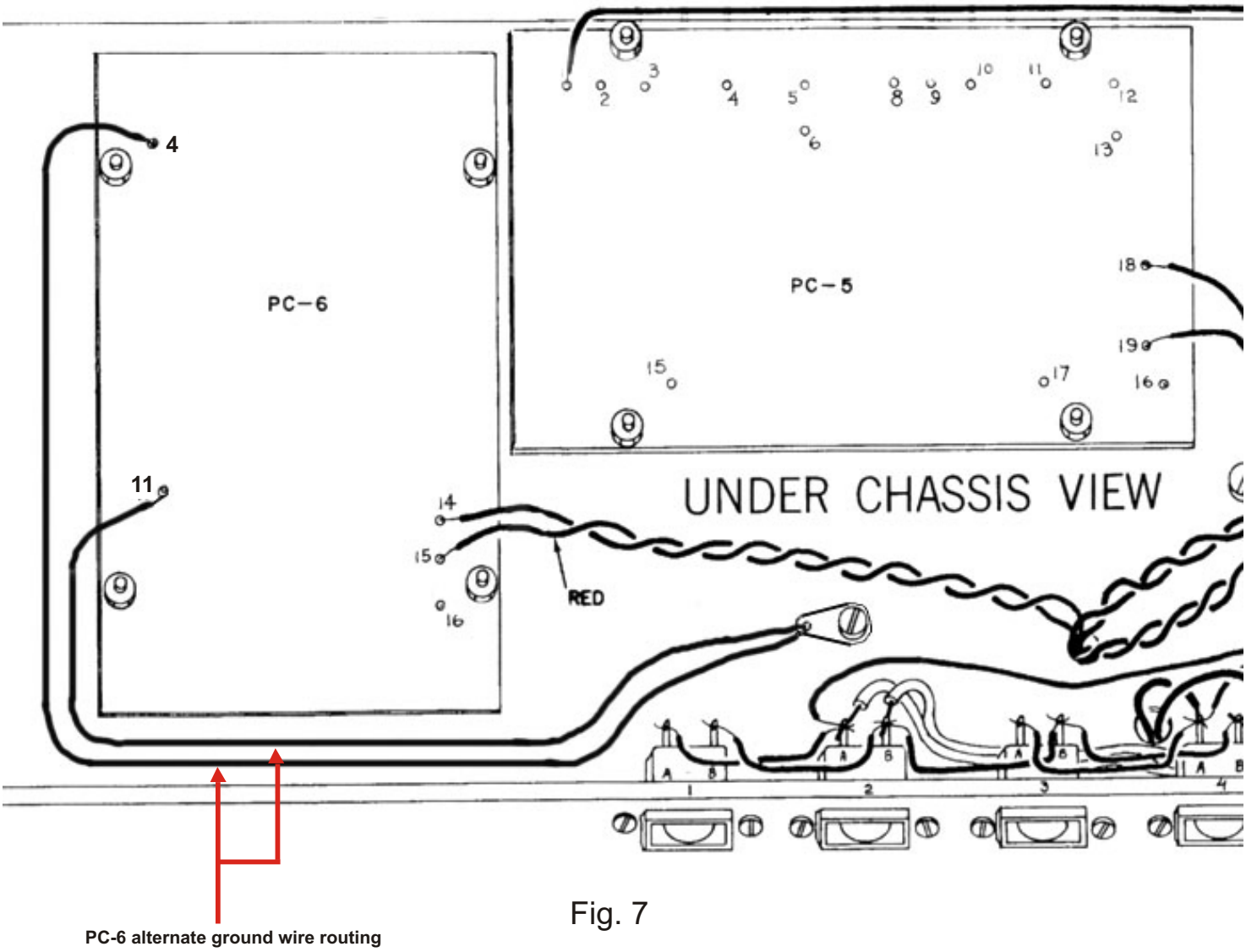

Fig. 7

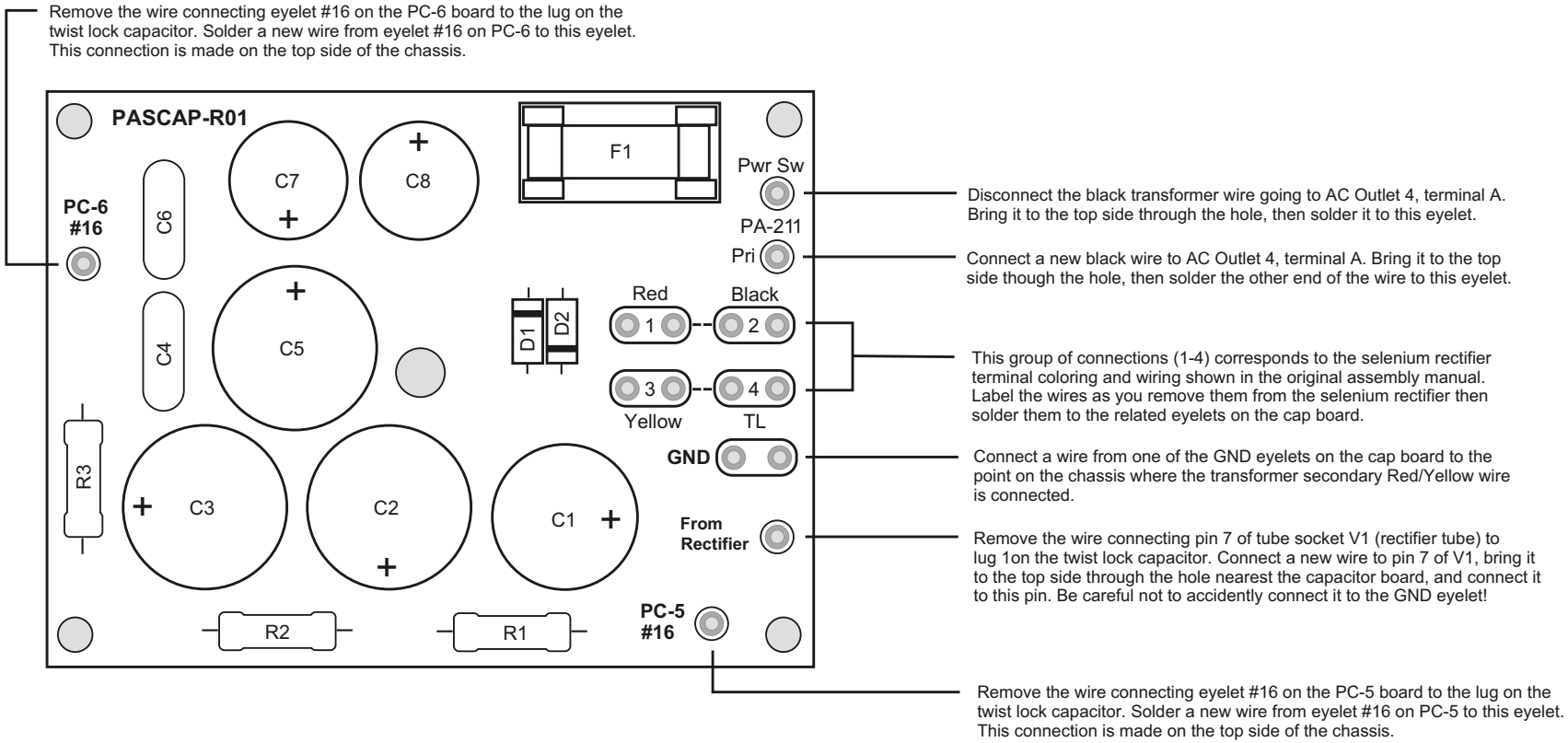

Pacific Audio Regenesis

PAS Capacitor Board

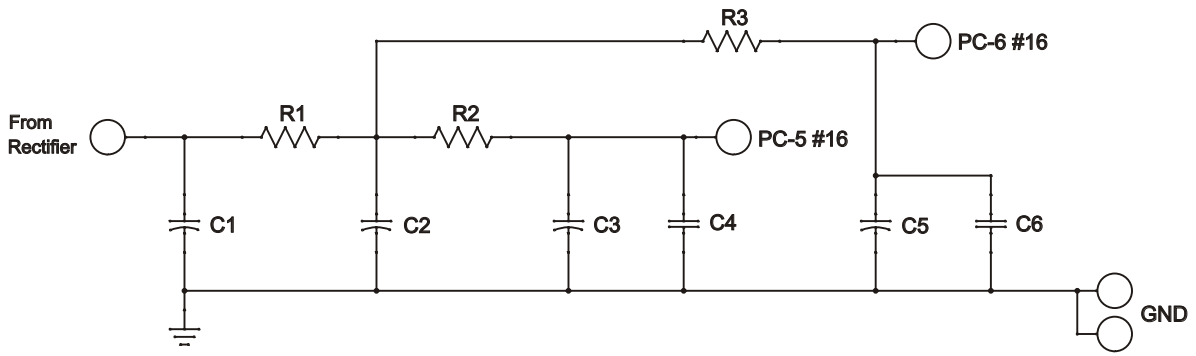

R1, R2 - 10K 1W
R3 - 47K 1W
C1 - 22uF 450V
C2, C3, C5 - 47Uf 450V
C4, C6 - 0.1uF 450V
C7, C8 0 2200uF 25V
D1, D2 - 1N4007
F1 - 500mA - Slo Blo

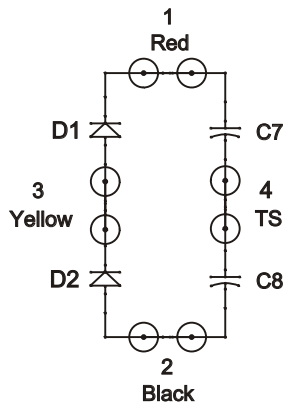

Pacific Audio Regenesis

PAS Capacitor Board